LANTERNA NK 27

Part number 3102163

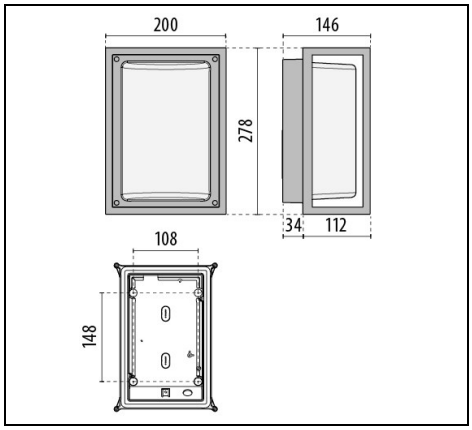

IP 65 | CLASS I

Description

Series of wall mounted luminaires in two sizes for indoor and outdoor, comprising:

- Die-cast aluminium housing and trim, polyester powder coat finish ISO 9227/12944 - ISO 9223 (C5)
- Pressed glass diffuser, internally coated, secured with the ring
- Transparent, pressed glass diffuser (E27 versions)
- Aluminium reflector and gear tray
- Technopolymer silicone sealing gasket
- Burnished stainless steel fixing screws
- Built-in driver
- Design by ROBERTO FIORATO

To maintain the regular updating of our products, PERFORMANCE iN LIGHTING reserves the right to make changes without prior notice. For the most up to date information we always recommend you read the latest version published on the website www.performanceinlighting.com. Delivered luminaire lumen outputs and power consumptions, including losses, are subject to a tolerance of +/- 7%, and unless otherwise stated the values apply to an ambient temperature of 25ºC. Terms of warranty are available at https://www.performanceinlighting.com/qr/company/led-warranty

For information:
PERFORMANCE iN LIGHTING S.p.A. Headquarters - Italy
Viale del Lavoro 9/11
37030 Colognola ai Colli Verona - Italy
Tel. +39 045 61 59 211

info.it@pil.lighting
www.performanceinlighting.com

Product data

ETIM Group:	EG000027	**ETIM Class:**	EC001745

General information

Lampholder:	E27	**Light source:**	
Luminaire wattage [W]:	1x100 W	**Colour / Finishing:**	AN-96 / Anthracite gray / Textured
IP degree of protection:	IP65	**Impact resistance / impact energy:**	IK08 5J xx5
Protection class:	I	**Optic:**	-
Net weight [kg]:	2.785	**Overall length [mm]:**	200
Overall width [mm]:	146	**Overall height [mm]:**	278

Mechanical features

Shape:	Rectangular	**Housing material:**	Aluminium
Diffuser material:	Glass		

Installation

Application area:	Outdoor lighting	**Mounting type:**	Bulkhead
Min. ambient temperature [°C]:	-30	**Max. ambient temperature [°C]:**	25

Light features

Distribution of light emission:	Direct

To maintain the regular updating of our products, PERFORMANCE iN LIGHTING reserves the right to make changes without prior notice. For the most up to date information we always recommend you read the latest version published on the website www.performanceinlighting.com. Delivered luminaire lumen outputs and power consumptions, including losses, are subject to a tolerance of +/- 7%, and unless otherwise stated the values apply to an ambient temperature of 25ºC. Terms of warranty are available at https://www.performanceinlighting.com/qr/company/led-warranty

For information:
PERFORMANCE iN LIGHTING S.p.A. Headquarters - Italy
Viale del Lavoro 9/11
37030 Colognola ai Colli Verona - Italy
Tel. +39 045 61 59 211

info.it@pil.lighting
www.performanceinlighting.com

To maintain the regular updating of our products, PERFORMANCE iN LIGHTING reserves the right to make changes without prior notice. For the most up to date information we always recommend you read the latest version published on the website www.performanceinlighting.com. Delivered luminaire lumen outputs and power consumptions, including losses, are subject to a tolerance of +/- 7%, and unless otherwise stated the values apply to an ambient temperature of 25ºC. Terms of warranty are available at https://www.performanceinlighting.com/qr/company/led-warranty

For information:
PERFORMANCE iN LIGHTING S.p.A. Headquarters - Italy
Viale del Lavoro 9/11
37030 Colognola ai Colli Verona - Italy
Tel. +39 045 61 59 211

info.it@pil.lighting
www.performanceinlighting.com